• CKS-FD9000

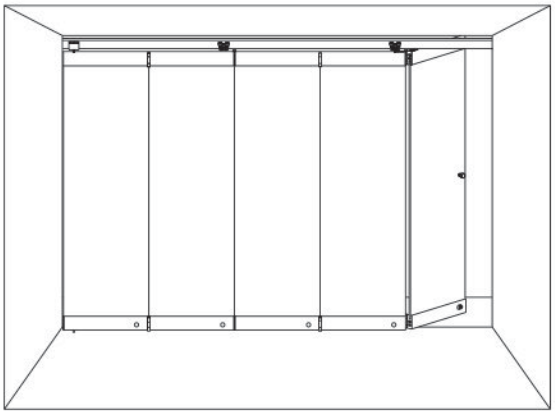

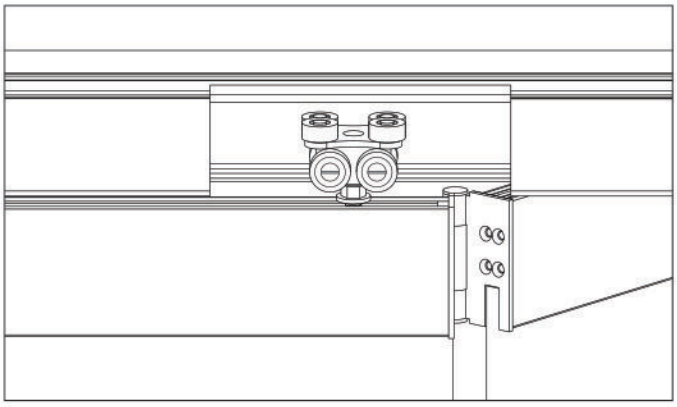

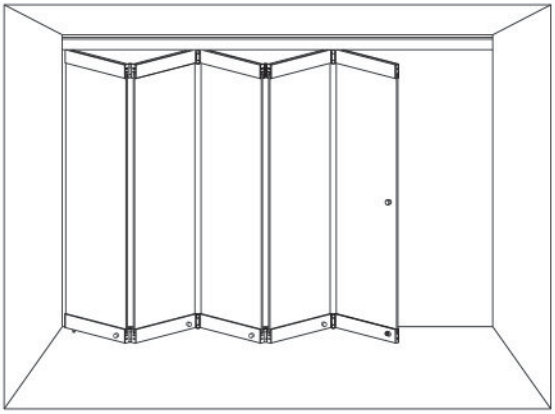

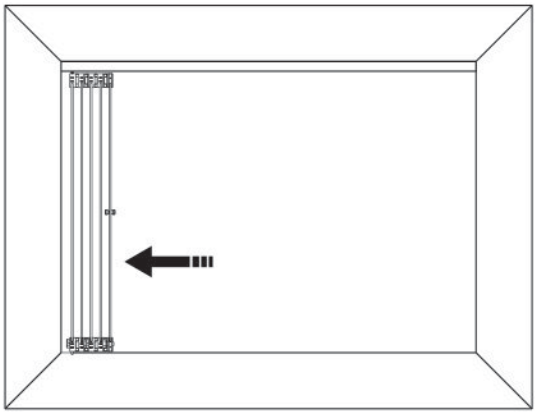

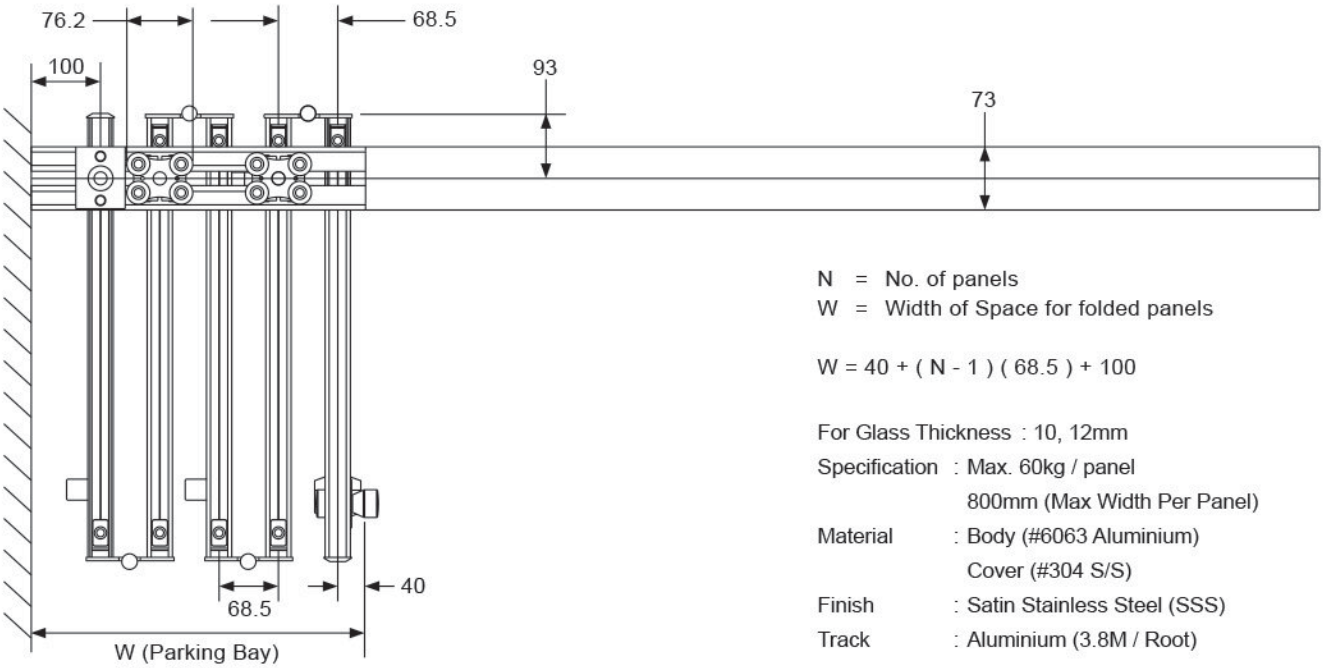

N = No. of panels
W = Width of Space for folded panels

W = 40 + (N - 1) (68.5) + 100

For Glass Thickness : 10, 12mm
Specification : Max. 60kg / panel
800mm (Max Width Per Panel)
Material : Body (#6063 Aluminium)
Cover (#304 S/S)
Finish : Satin Stainless Steel (SSS)
Track : Aluminium (3.8M / Root)

Copyright © 2022 CKS GLASS HARDWARE SDN BHD. All Rights Reserved.

Product dimension might be subjected to change based on factory production. Please check with CKS sales personnel for confirmation before fabrication.