• CKS-FD9000

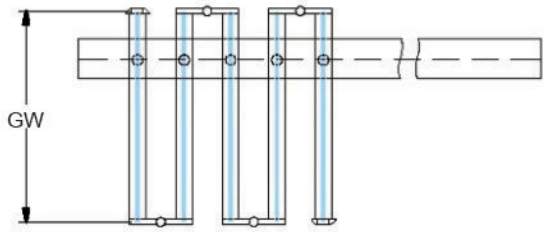

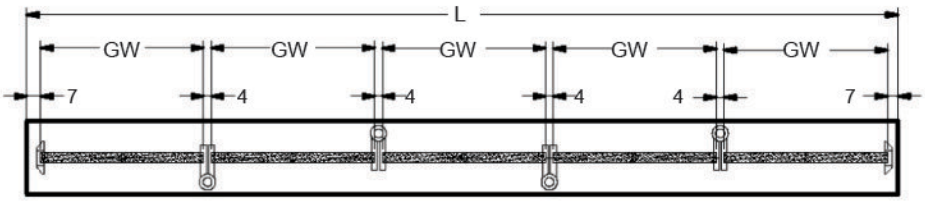

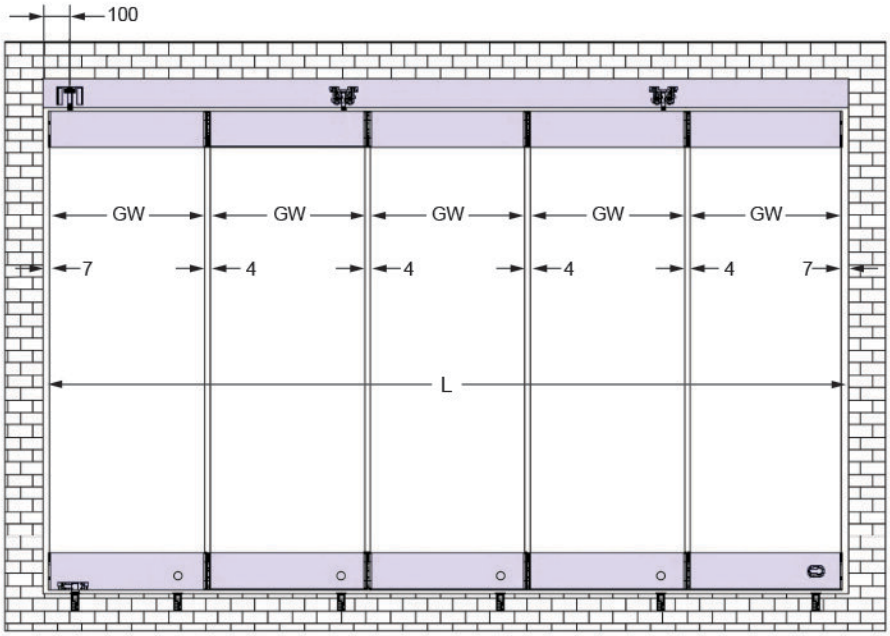

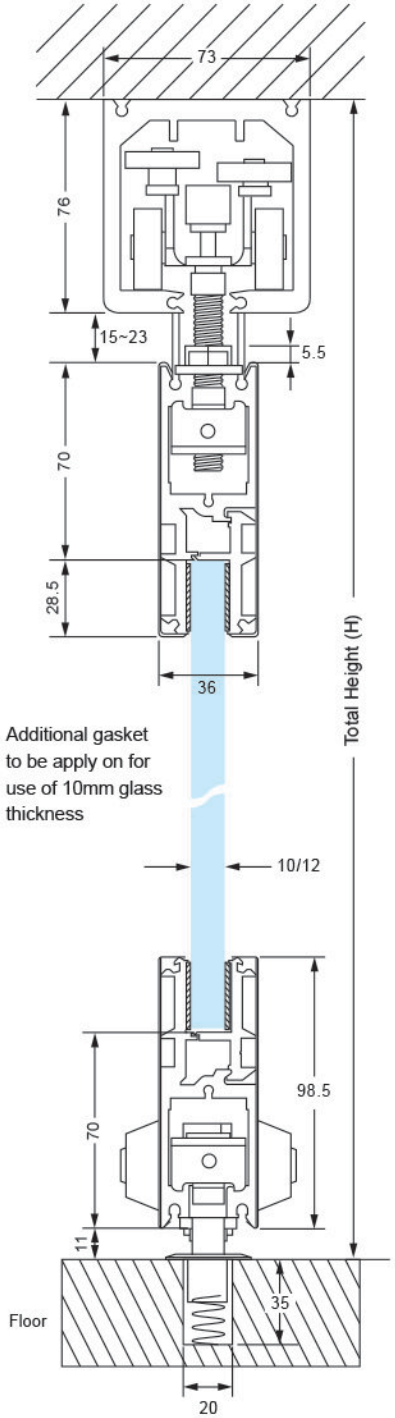

Glass Height = (H-242mm) ~ (H-250mm)

L	:	Door Opening
N	:	No. of Panels
GW	:	Glass Width
Mean	:	GW = { L - [(N - 1) x 4] - [7 x 2] } ÷ N

Size of Aluminium Door Rail & Stainless Steel Cover

For CKS-FD9000-10 / 20 / 60 / 70 / 80 = GW - 8

For CKS-FD9000-30 / 40 / 50 = GW - 6

Copyright © 2022 CKS GLASS HARDWARE SDN BHD. All Rights Reserved.

Product dimension might be subjected to change based on factory production. Please check with CKS sales personnel for confirmation before fabrication.